built on relationships

GREATER MANCHESTER LOCAL TRANSPORT

On the buses with Kassel Kerb

PROJECT:	Greater Manchester Local Transport Plan
CLIENT:	Tameside Metropolitan Borough Council
PRODUCT:	Kassel Kerb

Public transport occupies an important place in the strategies of local authorities since it satisfies a need for lower Carbon travel. It can also help relieve congestion within major urban areas by providing convenient low cost mobility to the residents of an area.

The Greater Manchester area is in the midst of a bus stop upgrade programme which has already seen more than 1,400 upgraded.

The improvements to bus stops have been extensive and start with an assessment for location and suitability of use. The evaluation of each stop has looked at whether the stop is in the right location, whether the lighting and drainage is adequate, does it provide good quality information, can a shelter and seating be installed and does it allow for easy access on and off the vehicle.

Ian Evans, Contracts Manager (Operations) with Tameside Metropolitan Borough Council, explains how the programme has been implemented in the Tameside area; "Brett Kassel Kerbs have been used throughout to help raise the stops to enable easier access on and off the buses. The kerbs are substantial and the perfect height. They are a great product. The project has also seen the use of recycled glass as a joint filler, which while not a new idea, the council is keen to see reintroduced."

The renovated bus stops feature a blockwork border, E70 flags, signage flag and waste bin, whilst the Kassel Kerbs form a seamless join between low-floor buses and the stops. This not only improves passenger safety, especially for those with limited mobility and the visually impaired, but also reduces expensive wear and tear on vehicle tyres thereby substantially cutting overheads for the bus and coach operators.

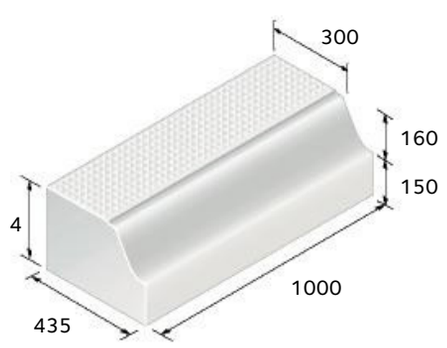

Kassel 160mm standard kerb

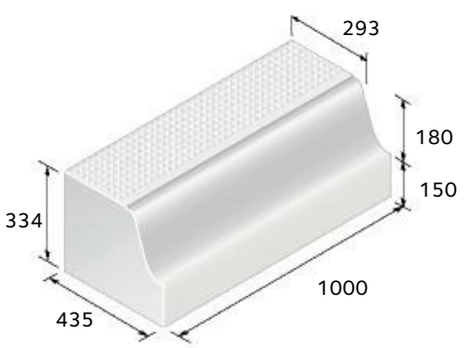

Kassel 180mm standard kerb

The Kassel Kerb is used in over 1200 cities and towns across Europe and has become Europe's number one bus stop kerb system. The roadside wall of the kerb guides vehicle into the optimal stopping position leaving a maximum gap of just 50mm between vehicle and kerb thereby maximising both safety and service speed.